APPLICATION FOR A NEW WIRELESS COMMUNICATIONS FACILITY SPECIAL USE PERMIT
CO-04007-Hermosa
Project Number: PL20160097
Submitted to La Plata County Community Development Services Department
August 9, 2016

1. GENERAL INFORMATION

APPLICANT: Skyway Towers, LLC

REPRESENTATIVE: Nicholas M. Constantine
Tower Engineering Professionals, Inc. (TEP)
5545 West 56th Ave, Unit E, Arvada, CO 8000
nconstantine@tepgroup.net
(303) 566-9914

PROPERTY OWNER: Dillon Ranches LLLP
PO Box 1773 Durango, Co 81302

PROJECT ADDRESS: 691 Trimble Lane
Durango CA 80301

PARCEL #: 559715100074

Zoning Classification: Animas Valley Industrial

Tower Engineering Professionals ("TEP") is submitting this application on behalf of Skyway Towers, LLC ("Applicant") and the underlying property owner, Dillon Ranches LLLP.

2. PROPOSAL

2.1 Project Overview

In order to improve AT&T's existing service currently provided by its equipment located on an existing 64' concrete silo and fill a gap in LTE coverage experienced by AT&T customers, Applicant proposes to construct a 124' monopole on a parcel where AT&T currently has antennas at an existing concrete batch plant. Applicant proposes to relocate the existing AT&T antennas from the 64' concrete silo onto a new 124 feet monopole and add an additional sector of antennas to add LTE. The existing equipment/antennas located on the concrete silo is limited to 3G service~~,~~ and lacks space for LTE and future sectors/technologies.

Existing AT&T ground equipment is proposed to remain. Applicant has secured additional ground space to allow for future carriers that wish to collocate on the 3 additional antenna spaces on the proposed monopole. The project will utilize the existing 240 square foot AT&T shelter and there will be an additional fenced area to accommodate the equipment of future collocators. Access will be provided via the existing access road that connects to CR 252 a public, asphalt paved road. See Drawing SV-1 attached to the Checklist at B.04.

The proposed new facility meets AT&T's coverage objectives (providing outdoor, in-vehicle, and in-building coverage) within a geographic area, and to replace service which would otherwise be reduced upon the decommissioning of an existing AT&T site (Lone Pine Trailer Park Tower north of proposed site). The new facility will also expand coverage which is currently challenged due to topographical restraints farther north and south.
AT&T requires the 124-foot tower requested by this application to achieve the signal strength necessary to deploy LTE and to host 3 other collocators at usable elevations.

Applicant's proposal is designed to provide the least intrusive means of extending AT&T's service to fill its coverage gap by selecting a site that is zoned Industrial. The site location is now, and will continue to be, a non-residential use. The telecommunications site will be unmanned. The existing concrete batch plant and sand and gravel yard will remain in operation. The proposed 124-foot tower will allow the decommissioning of the Lone Pine Trailer Park Tower and provide space for 3 additional carriers, which greatly facilitates the County's stated goal of having fewer telecommunications towers.

To further reduce the visual impact and enhance compatibility Applicant is proposing to paint the monopole and antennas a neutral color compatible with the surroundings, with a non-reflective finish.

2.2 Network Information & Site Selection

AT&T is upgrading and expanding its wireless communications network throughout Colorado, including the installation of the latest LTE technology at the proposed site.

LTE stands for "Long Term Evolution." This acronym refers to the ongoing process of improving wireless technology standards with speeds up to ten times faster than 3G. LTE technology is the next step in increasing broadband speeds to meet the demands of uses and the variety of content accessed over mobile networks.

Wireless users of all ages rely on wireless devices to report medical emergencies, accidents, crimes, and fires at home, school, work and everywhere in between. More than 70% of all emergency calls are placed with a mobile phone. Public safety agencies across the country utilize wireless broadband services for critical activities such as dispatching, connecting to law enforcement databases, and emergency alerting. Agencies also rely on wireless infrastructure to provide accurate location information to respond to calls from wireless devices. The National Science Foundation has developed a revolutionary smartphone app that provides 911 operators critical insights into what's going on at the scene of an emergency call by relaying crucial biometric data to dispatchers, enabling them to gather vital signs and other information that help them assist victims and empower first responders.

Mobile text and voice alerts allow local, state, and federal public safety agencies to provide early warnings and critical information to the public before, during, and after emergencies, including storms, tornadoes, floods, hurricanes, fires, child abductions (such as Amber Alerts) and missing seniors (such as Silver Alerts). Crisis centers are teaching employees and volunteers how to help teenagers who reach out during a personal crisis by text messages or chat services, saying many prefer the additional anonymity of using their wireless device.

In academia, curricula are evolving from static textbooks to immersive, interactive learning environments where nearly all content will be delivered digitally in a format that supports exploration, broad overviews and deep dives with video, text, digital images and interactive (game-like) experiences. Distance and computer aided tutoring are now possible on wireless mobile devices available any place, any time. Personalization to specific learning level, pace and styles (visual, auditory, kinesthetic), offers the dynamics of a classroom anywhere after the formal school day is complete. All types of learners now have unprecedented access to research data and educational resources, mentors, experts, video recordings of teaching/lectures, and online educational activities. Teachers benefit from digital participation in collaborative communities of practice with global reach to aid in raising their own performance levels.

The need for service in this particular geographic area is determined by market demand, coverage requirements for a specific geographic area, and the need to provide continuous coverage from one site to another in a particular geographic region. The reliability of wireless communication facilities declines as users of the services congest the existing network necessitating the addition of new towers.

As AT&T's technology improves and expands from 2G and 3G to LTE, the company is committed to meeting all wireless communication needs of its customers by delivering faster data speeds and more reliable and expansive voice and data connections, whether its customers are in buildings, in vehicles, or outdoors. The addition of new technology will also reduce the number of dropped calls and otherwise address customer service issues in the area.

In 2013, AT&T began deploying the newest Long Term Evolution (LTE) technology at their cell sites first in core urban areas. LTE demands stronger overall signal strength to support faster data rates. Data throughput on the AT&T network has increased 150,000% since 2007, and constantly deploying the newest technology is necessary to keep pace with residential and commercial customer demand. AT&T is now including LTE in all of their sites and is included in this proposal. As such, the proposed installation is a standard application of this technology.

Once the need for additional coverage in a particular area has been established, the radio frequency ("RF") engineers perform an RF engineering study evaluating the existing network with extensive computer modeling to determine the approximate site location and antenna height that is required to provide service in the desired coverage area. RF engineers identify an area where a site may be located in order to provide service in the desired coverage area. The RF engineer takes the following objectives into consideration when identifying the search ring:

Coverage. The antenna site must be located in an area where the radio frequency broadcasts will provide adequate coverage within the significant gap in coverage. The RF engineer must take into consideration the coverage objectives for the site as well as the terrain in and around the area to be covered. Since radio frequencies travel in a straight line and diminish as they travel further away from the antennas, it is generally best to place an antenna site near the center of the desired coverage area. However, in certain cases, the search ring may be located away from the center of the desired coverage area due to the existing coverage, the surrounding terrain, or other features which might affect the radio frequency broadcasts like buildings or sources of electrical interference.

2. Clutter. The antennas must "clear the clutter" in the area. The radio frequencies used are adversely affected by trees, buildings, and other natural and man-made obstacles. The radio frequencies do not penetrate mountains, hills, rocks or metal, and its radio frequencies are diminished by trees, brick and wood walls, and other

structures. Therefore, antennas must be installed above the "clutter" in order to provide high quality communications services in the desired coverage areas. In addition, if the local code requires us to accommodate additional carriers on the structure, the structure must be even higher in order to allow the other carriers' antennas to clear the clutter as well.

3. Call Handoff. The antenna site must be located in an area where the radio broadcasts from this site will allow seamless call handoff with adjacent sites. "Call handoff" is a feature of a wireless communications system which allows an ongoing telephone conversation to continue uninterrupted as the user travels from the coverage area of one antenna site into the coverage area of an adjacent antenna site. This requires coverage overlap for a sufficient distance and/or period of time to support the mechanism of the handoff.

4. Quality of Service. Users of wireless communications services want to use their services where they live, work, commute and play, including when they are indoors. AT&T's coverage objectives include the ability to provide indoor coverage in areas where there are residences, businesses and indoor recreational facilities.

5. Radio Frequencies used by System. The designs of wireless communications systems will vary greatly based upon the radio frequencies that are used by the carrier. If the carrier uses radio frequencies that are in the 850 MHz to 950 MHz range, the radio signals will travel further and will penetrate buildings better than the radio frequencies in the 1900 MHz band.

6. Land Use Classifications. The ability to construct a cell site on any particular property is affected by Colorado state law and La Plata County's County regulations, including zoning and area plan classifications, goals and policies. The search areas take these laws and regulations into consideration.
The coverage propagation software systems use these and other factors (type of antenna; antenna tilt, etc.) to predict the coverage that will be provided by the proposed site.

One of the limitations with computer modeling in this geographic area is that, as comprehensive as it has become, it is still only a forecast of coverage based on model inputs. The less complicated the terrain and landscapes are, the more accurate modeling becomes. The terrain near the Trimble Lane site is very diverse and includes large trees, varying topography and elevations, and other obstacles that interfere with the actual propagation of radio signals and the accuracy of modeling. Water is another factor that negatively influences RF signals and the Animas River adds further complexity to this site's design and performance.

This proposed project will allow AT&T to provide wireless communications service in the significant gap in capacity and coverage in this area, allow for uninterrupted wireless

service with fewer dropped calls, improve call quality, and improve access to additional wireless services, like data, email and streaming video that the residents and businesses now require where they live, work and enjoy recreation. This includes emergency 911 calls throughout the area. With a significant portion of customers choosing to have cell-only service with no landline, reliable wireless service becomes critically important.

3. APPLICABLE LAW

Federal Law.

Federal law, primarily found in the Telecommunications Act, acknowledges a local jurisdiction's zoning authority over proposed wireless facilities but limits the exercise of that authority in several important ways.

The federal Telecommunications Act of 1996 ("Telecom Act") prohibits a county or other political subdivision of the state from taking any action on a wireless siting permit that "prohibit[s] or [has] the effect of prohibiting the provision of personal wireless services." (47 U.S.C. § 332(c)(7)(B)(1)(II).)[1] Under the Telecommunications Act, a jurisdiction is prohibited from considering the environmental effects of radio frequency emissions (including health effects) of the proposed site if the site will operate in compliance with federal regulations. 47 U.S.C. Section 332(c)(7)(B)(iv).

Applicant has included with this application a statement from its radio frequency engineer demonstrating that the proposed facility will operate in accordance with the Federal Communications Commission's RF emissions regulations. (Attached to Checklist at Other/Miscellaneous.) Therefore, this issue is preempted under federal law and any testimony or documents introduced relating to the environmental or health effects of the proposed site should be disregarded in evaluating whether this application should be approved.

Additionally, just as the jurisdiction may not consider the environmental effects of radio frequency emissions, it also may not discriminate amongst providers of functionally equivalent services. A jurisdiction must be able to provide plausible reasons for disparate treatment of different providers' applications for similarly situated facilities.

Finally, the Telecommunications Act requires local jurisdictions to act upon applications for wireless communications sites within a "reasonable" period of time. The Federal Communications Commission ("**FCC**") has issued a "**Shot Clock**" rule to establish a deadline for the issuance of land use permits for wireless facilities. According to the

---

[1] [1] The Telecom Act imposes additional constraints on local governments. For instance, local governments (a) cannot unreasonably discriminate among providers of functionally equivalent services; (b) must act on siting applications within a reasonable period of time; (c) must ensure that denials of siting permit applications are in writing and supported by substantial evidence; and (d) cannot regulate the placement, construction, and modification of personal wireless service facilities on the basis of the environmental effects of radio frequency emissions. (47 U.S.C. § 332(c)(7)(B).)

FCC, a reasonable period of time for local government to act on wireless applications is 90 days for a co-location application and 150 days for all other applications. This time period includes all application notice and appeal periods. Under the Shot Clock, the reasonable time period for La Plata County's review of this application is 150 days.

La Plata County Code, Article II, Division 5-Telecommunications Facilities

LPLUC Sec. 82-206. ***Permitting process and application requirements.***

(b) Application requirements. The application requirements in this section shall be required for land use code permitting in addition to all other application requirements in this subpart b. Only items determined by the director to be relevant to the proposed development shall be required. An application shall not be deemed complete until the department receives all information required in this section. Application review and actions by planning staff shall be as described in sections 82-81 and 82-92.
Response: Understood and acknowledged.

(1) General and Administrative application requirements. The following items shall be required for all applications for construction or modification of a telecommunications facility submitted pursuant to this division.

a. Proof that the lot subject to the application was legally subdivided.
Response: Applicant is pursuing a boundary line adjustment to move one of the property lines on 3 contiguous parcels in common ownership, which include the site for the proposed facility, in order to meet setbacks. Refer to La Plata County Application "PL20160116 Dillon Ranches BA" for additional information. Documentation as to subdivision and ownership are attached to checklist at B.17.

b. A written narrative describing the purpose of the proposal and the nature of the construction or modification. The narrative shall clearly explain the type of service to be provided and the frequency or bandwidths to be used. The narrative shall also address lighting, security, and signage for the telecommunications facility and explain how applicable requirements regarding these are met.
Response: See responses contained in this document addressing lighting, and signage. The facility will be secured with a fenced lease area and a locked equipment shelter. The project is designed to provide new 700 LTE in building coverage to a service area, reflected in the propagation study maps(attached to the Checklist at Other/Miscellaneous), which do not currently have this coverage.

c. A propagation study demonstrating that the facility is no larger than necessary to efficiently provide telecommunications service (and space for collocation if necessary). The study shall include a graphic depiction and estimated size of the area in which service will be newly provided and estimated size of the area where service will be improved by the proposed facility. The county may hire a consulting professional engineer to review the study; the applicant shall be financially responsible for having the study prepared and, if necessary, reviewed.

Response: Applicant has designed the facility to accommodate 4 carriers. The height of a panel antenna is typically 8 to 9 feet, with 10 feet of separation necessary between each carrier's installation to avoid interference. To meet the County's goal of minimizing the number of wireless facilities, AT&T must have a centerline height of 120 feet (antenna tip height of 124 feet) to meet its coverage objectives and to have three viable collocation spaces on the proposed tower. At this height, this new tower will eliminate the need for three potential new towers and allow the decommissioning of the Lone Pine Trailer Park site. AT&T has demonstrated the need for antenna tip height of 124 feet due to terrain and coverage objectives in the revised propagation study, submitted as Ex.B.Other RF Propagation Map (Dated August 8, 2016).

It should be noted that the terrain in this area of La Plata County challenges the predictability of the computer modeling. As the attached Declaration of Scott September explains, the computer modeling in 2011 predicted that the Hermosa installation at 58 feet would allow the Lone Pine site to come off line and would replace that coverage.

When AT&T turned off the Lone Pine site after attaching to the Hermosa silo at 58 feet, it was discovered that the new site did not supply adequate coverage to turn the Lone Pine site off. In designing the proposed site for 124 feet, AT&T has tried to take this into account so that the Lone Pine site can finally be taken offline.

d. Elevation drawings of at least two (2) sides of the proposed telecommunications facility in its entirety. Drawings of structure-mounted facilities must include the structure.
Response: Attached to checklist at B.14.

e. Photo-simulations of at least two sides of the proposed telecommunications facility. For modifications of existing facilities, photographs of the facility in its current state shall also be provided.
Response: Attached to checklist at Other/Miscellaneous. See additional Balloon Test photos shown at the end of this narrative package.

f. A professional engineer's certification that the proposed construction or modification is structurally sound.
Response: Attached to checklist at Other/Miscellaneous by Michael F. Plahovinsak, P.E. dated August 2, 2016.

g. A description of the size, type, and output of any proposed lighting on the telecommunications facility. This may be included on the above-mentioned elevation drawings.
Response: Attached to checklist at B.14 and described in narrative at B.01.

h. Written certification from a professional engineer that demonstrates compliance with Federal Communications Commission standards regarding electromagnetic radiation emissions.
Response: Attached to checklist at Other/Miscellaneous.

(2) Class I application requirements.
Response: N/A

*(3) Class II application requirements**.** In addition to the general and administrative requirements, the following items shall be required for all applications for construction or modification of a telecommunications facility submitted pursuant to this division and subject to class II permitting.*

> *a. For construction of a telecommunications tower, evidence that demonstrates there are no existing towers or other types of structures capable of supporting antennae that will provide the proposed telecommunications service, or evidence that demonstrates an unsuccessful good-faith effort to collocate on existing towers or structures.*
> **Response:** Attached to checklist in Other/Miscellaneous. is the FCC Antenna search record showing that there are no towers of sufficient height within 4 miles of the search area to achieve the coverage objective. Please see the Alternate Locations section below.
>
> *b. For construction of a telecommunications tower, in addition to the requirements of Sec. 82-206 (b) (1) (c), the propagation study shall include graphic depictions and estimated sizes of the areas in which service would be provided or improved at lesser tower heights.*
> **Response:** Attached to checklist at Other/Miscellaneous.
>
> *c. For construction of a lattice tower, documentation indicating that the construction and maintenance of a monopole tower would not meet*

the standards of this division, documentation indicating aesthetic considerations favor the use of a lattice tower at the proposed location, or a written certification from a professional engineer that a monopole tower would not be technically feasible for the proposed project.
Response: Applicant is not proposing a lattice tower.

d. For construction of a telecommunications tower, a written narrative describing the potential for future collocation on the tower. The potential for future collocation shall also be shown on the elevation drawings and certified by a professional engineer.
Response: Attached to checklist at B.14 and described in narrative at B.01

e. For construction of a telecommunications tower, a landscaping plan.
Response: Applicant is proposing to plant five (5) Colorado Blue Spruce trees on the east side of the compound. The south and west side of the lease area is screened by existing landscaping and concrete batch plant facilities. The north side of the lease area is screened to neighboring properties with gravel piles that are associated with the sand and gravel material facility and existing trees/landscaping along the property boundary of the golf course and the sand and gravel material facility.

LPLUC Sec. 82-207*(b) General standards.*
Except as provided below, the following standards shall apply to all telecommunication facilities.

(1) All telecommunications facilities shall demonstrate compliance with Federal Communications Commission standards regarding electromagnetic radiation emissions.
Response: An Evaluation of Compliance with FCC Guidelines for Human Exposure to Radiofrequency Radiation Report, dated June 22, 2016, is attached to checklist at Other/Miscellaneous. The proposed facility will operate at less than 1% of the FCC general population exposure limits for radiofrequency emissions.

(2) Building plans for telecommunication facilities shall be certified by a professional engineer to be structurally sound and must meet applicable building code requirements.
Response: Attached to checklist at Other/Miscellaneous.
- B. Other – MFP PE Letter
- B.04 Site Plan – Revised July 27, 2016

(3) Except for those that have received a director's determination letter that a land use permit is not required, telecommunications facilities shall be no larger than necessary to efficiently provide telecommunication services and space for collocation as required by section 82-207 (d) (6).

Response: This facility is designed to improve existing coverage and provide expanded service to include 700 LTE coverage. AT&T's coverage objectives are fully met at 124 feet, and the height is also necessary given the County's requirement that all new facilities provide space for 3 additional collocation. At a minimum, the height must include the height of panel antennas (typically 8 or 9 feet), as well as 10 feet of separation space between each collocator to avoid interference. For those pole locations to be desirable to a collocator, they need to have sufficient height to clear the surrounding vegetation, structures and other clutter. A minimum of 76 feet of antenna and separation space is needed just to accommodate the future collocators. AT&T's coverage objectives are fully met at 124 feet and this height also provides reasonable heights for future collocators, which can reduce the number of new towers needed to serve this area.

(d) Design and performance standards for freestanding facilities. In addition to the requirements of paragraph (b) of this section, the following standards shall apply to freestanding facilities and modifications of freestanding facilities that require a land use permit:

(1) Collocation as opposed to new telecommunications tower construction shall be required. The requirement may be waived by the director upon a submittal of a written request by the applicant that demonstrates a need for a new tower. To demonstrate a need for a new tower, the applicant shall provide evidence that demonstrates that there are no existing towers or other types of structures capable of supporting antennae that will provide the proposed telecommunications service, or evidence that demonstrates an unsuccessful good-faith effort to collocate on existing towers or structures.

Response: See B. Other Vicinity Map –Collocation document. As introduced on Page 9, the FCC Antenna search demonstrates there are not towers of sufficient height within four miles of the search are to achieve the coverage objective. The existing nearby towers are not feasible for collocation. There are only two sites that could potentially provide similar coverage. One tower 2.1 miles to the north is a 24' tall monopine, which would not provide adequate height to locate additional antennas. There is another tower 2.7 miles to the south that is a 30' Stealth Tower which has insufficient height and has no available canister space to install additional antennas.

(2) For collocations on stealth towers, new antennae must match the pre-existing camouflage scheme.
Response: Not applicable. This is not proposed as a stealth tower, given the industrial uses on the property.

(3) Speculative towers shall not be permitted.
Response: The proposed facility is not speculative. Applicant has leased space on the proposed tower to AT&T.

(4) Lattice towers are prohibited unless the director determines in writing that:
a. The construction and maintenance of a monopole tower would not meet the standards of this division, such as the requirement for collocation;
b. Aesthetic considerations favor the use of a lattice tower at the proposed location; or
c. A professional engineer provides written certification that a monopole tower would not be technically feasible for the proposed project.
Response: The proposed facility is not a lattice tower.

(5) New freestanding facilities shall be capable of supporting at least three additional antennae mounts and associated antennae.
Response: As the zoning drawings attached to the Checklist B.04,B.14, and the PE letter provided by MFP, the tower manufacturer, indicate, the monopole is engineered to provide space for 4 carriers.

(6) The maximum telecommunications tower height allowed shall be one hundred and ninety-nine feet.
Response: As the zoning drawings attached to the Checklist at B.04 and B.14 indicate, the proposed height of the monopole, including the lightning rod, is 124 feet.

(7) The setback from a telecommunications tower to any property line shall be at least 1.3 times the tower height.
Response: As the zoning drawings attached to the Checklist at B.04 indicate, the monopole will be set back from the nearest property line to meet this code requirement. The project site is located on acreage consisting of 3 parcels held in common ownership. To accommodate the setback requirements, Applicant is concurrently pursuing an application to realign the parcel boundaries. Refer to La Plata County application "PL20160116 Dillon Ranches BA" for additional information.

(8) Support facilities associated with freestanding facilities shall meet the following requirements:

a. Support facilities at ground level such as equipment cabinets and backup power sources shall be located in an enclosed structure that is architecturally compatible with the surrounding environment or shall be screened completely with other visual mitigation techniques, including but not limited to, vegetation, berms, landscaping boulders, or an architecturally compatible wall or fence;

Response: The proposed project will house the equipment in the existing AT&T shelter onsite. Future carriers will be located within the fenced compound. While the ground equipment is not visible from neighboring properties and roads, landscaping is proposed on the east side of the lease area.

b. Where security fencing is used, such fencing shall enclose the minimum space necessary for safety and be designed to blend with the character of the existing environment;

Response: The leased area will be fenced to be consistent with the existing industrial uses on the property.

c. Support facilities shall be grouped as closely as possible to each other and the telecommunications tower;

Response: As the zoning drawings attached to the Checklist at B.04 indicate, the support facilities for the existing carrier and future collocators are adjacent to the monopole.

d. Support facilities at ground level shall not exceed a surface area of four hundred and fifty square feet per telecommunications provider; and

Response: The existing AT&T shelter is 240 SF.

e. Light fixtures located on or used for support facilities shall be shielded to prevent light trespass.

Response: The project proposes a shielded light for the equipment shelter area. Any proposed lights, the existing AT&T shelter light, and the compound are screened from neighboring properties and roads.

ARTICLE III. ANIMAS VALLEY LAND USE PLAN DISTRICTS –

LPLUC Sec. 106-116. *Telecommunications Facilities.*

(a) In the Animas Valley Land Use Plan Area Planning District, telecommunications facilities as defined in Chapter 82, Division 5, may only be constructed in the neighborhood commercial, general commercial, and industrial land use plan districts,

except for the collocation of antennae on existing telecommunications towers or other types of structures in any district.
Response: The project site is zoned Industrial. There are no viable alternative locations in the commercial zones in the area. See additional B. Other Zoning Map.

(b) The construction of new telecommunication facilities or co-location of antennae as described above shall require approval of a special use permit. Application requirements shall be those listed for Class II approval in subsection 82-207(b).
Response: Applicant is filing a Class II application to comply with this requirement.

(c) When proposed to be located in the Animas Valley Land Use Plan Area, telecommunication facilities shall meet all applicable standards imposed by this Chapter, as well as the general standards imposed by chapter 82, Article II, Division 5. If the general standards imposed by Chapter 82, Article 11, Division 5, conflict with the applicable standards imposed by this chapter and cannot be read harmoniously with such standards, the stricter standard shall control and apply.
Response: The standards in Chapter 82 have been met, as demonstrated above, and can be read harmoniously with the Animus Valley Land Use Plan. While the Animus Valley Plan has a general building height maximum of 30 feet, cell tower height is not specifically addressed. The height of telecommunications facilities is <u>specifically</u> regulated in Chapter 82, and those standards are incorporated by reference by this section. The Countywide goal of collocation and fewer new towers is promoted by the requirement that each new telecommunications facility be designed for 4 carriers. With a typical panel antenna height of 8- 9 feet and 10 feet of clearance needed between each carrier's installation to avoid interference, the minimum tower height to accommodate 4 carriers is 76 feet, which does not take into account terrain, surrounding structures or height requirements of future collocators. Using the very general 30-foot height limit would effectively prohibit all new wireless facilities in the Animus Valley, because they would not be able to meet the 4 carrier collocation requirement. Thus, the more specific 199-foot height limit in Section 82 applies here. The project complies with the applicable standards of the Animus Valley Land Use Plan.

LPLUC 82-165 Buffering

(a) *General requirements. Buffering is required between development of different intensities and uses when necessary to achieve compatibility or when the development creates noise, glare, traffic, dust, unsightly views or other negative external effects perceptible off the site.*

Response: Due to the existing industrial use of the property (concrete batch plant, quarry and existing telecommunications facility), the minimal addition of proposed equipment and the sizable distance from adjacent properties, none of the criteria above would be negatively impacted. While the tower itself may be visible, (as the wireless facility and batch plant are today), the proposed ground equipment would not be visible from any views surrounding the properties. Landscaping is proposed on the east side of the lease area, which is visible from along the Animas River. Attached to the checklist at

D.01 is a map of photosimulations with views from several locations surrounding the property as well as views from throughout the valley during a balloon test that was conducted on May 25, 2016.

(b) Requirements for all development. All development shall meet the following requirements:

(1) Storage and service areas used for storage, loading/unloading and refuse shall be oriented away from adjacent development to the maximum extent feasible. Storage and service areas shall be screened from view from adjacent development by providing opaque barriers, or by using architectural or landscaping treatments, which reduce adverse impacts. In addition, service areas shall be designed to minimize noise, vibration, and odors to adjacent development.
Response: The proposal meets the buffering requirements of this section**.** The lease area for the facility is located a significant distance from any residential development. As the photosimulations attached to the checklist at D.01 and balloon test photos indicate, the equipment compound will not be visible from any residential property. This facility is buffered from residential areas by an expanse of golf course land, and by the sand and gravel quarry/batch plant property itself. Applicant plans to repurpose the existing equipment shelter to house the equipment for the proposed facility. The areas to the east where the site may be visible (Along the Animas River) will be screened with five (5) proposed Colorado Spruce Trees. Applicant agrees to comply with all applicable noise standards for La Plata County.

(2) Lighting shall comply with the following standards:
a. The maximum pole height shall be: 20 feet in height within 50 feet of a lot boundary; 25 feet in height within 50 to 150 feet of a lot boundary; and 30 feet in height in all other locations; and
b. Light sources shall be shielded and directed away from the lot boundary.
Response: The proposed facility will be unlit except for a small, shielded work light inside the equipment enclosure for use during the monthly maintenance visits.

(*3) An increased setback shall be used where appropriate to achieve buffering of the use. A change in the location of the use on the site may allow a use to be moved behind a topographic barrier, such as over a hill. In addition, an increased setback, even on a flat site, may provide sufficient distance to lessen noise and other impacts from the site*.
Response: An increased setback of 156 feet from the nearest property line is proposed for this facility.

(4) If mitigation requirements identified in this subsection conflict with an outside agency's requirements, alternative measures may be developed.
Response: Understood and acknowledged.

(5) Ongoing maintenance shall occur for all required landscaping, including the replacement of dead or unhealthy plantings. Landscaping shall be maintained by the property owner or other legal entity responsible for such plant materials as required and/or approved.
Response: Applicant hereby acknowledges and agrees to inspect, maintain, and effect necessary repairs of the tower, Applicant's equipment, and the leased area inside the fenced compound. Applicant commits to conducting maintenance and inspections of the Wireless Telecommunications Tower facility and to expeditiously cure all necessary maintenance and repair issues.

(c) Requirements for development adjacent to single family residential uses and vacant lots. Development located on a property adjacent to a lot with an existing residential dwelling unit, or vacant lot, shall comply with the requirements of this subsection (b). A property is considered adjacent even if separated by an alley or road right-of-way.

(1) An opaque wall, fence or similar screening with a minimum height of four feet and a maximum height of eight feet shall be provided to screen nonresidential, mixed-use, and multi-family uses from the residential property, or residential dwelling unit. Such screening alternatives may be approved by the director to meet this requirement, including but not limited to, berms or landscaping. The screening material shall be designed to absorb or block sound. This screening requirement shall not apply to front or street-side yards. An increased setback may be required in addition to any screening.

(2) For structures located on a property adjacent to a lot containing an existing dwelling unit or vacant lot, the following standards shall apply:
a. The maximum structure height shall not exceed 30 feet within 25 feet of the lot line abutting a lot containing a dwelling unit or vacant lot. Structures may develop to the maximum height permitted, for those portions of the structure 25 feet or more from a lot with a dwelling unit or vacant lot;
b. The development's structures shall be oriented so as to reduce views into an existing dwelling unit; and
c. Balconies shall be oriented away from the dwelling unit on the adjacent lot(s) or use a screening device to reduce views into the rear or side yards of residential lot(s).

(3) Parking areas or areas with noise and outdoor lighting features (e.g., outdoor patio for restaurant), shall be screened from existing dwelling units by any combination of a wall, fence, and/or landscaping creating an opaque, screened

condition. Chain-link fences, and unfinished side, or rough side of fabricated fences must be oriented away from adjacent properties or covered by vegetation.

(4) Nonresidential uses with outdoor components (e.g., outdoor dining, performance venues) located adjacent to a lot with an existing dwelling unit, or vacant lot, shall cease outdoor activities by 9:00 p.m. Loading or unloading activities shall take place between the hours of 7:00 a.m. and 8:00 p.m.

Response: Applicant will comply with this section and requests the approval of the Director to employ alternative screening to use the berms, buffering and landscaping referenced above. Due to the existing industrial use of the property (concrete batch plant/ sand and gravel quarry), the use of the existing equipment shelter for the new monopole, and the sizable distance from adjacent properties, none of the criteria above would be negatively impacted. While the tower itself may be visible, (as the wireless facility and batch plant are today), the tower will be painted a compatible color with a non- reflective finish. The proposed ground equipment would not be visible from any views surrounding the properties, except for portions along the Animas River. Landscaping is proposed along the east side of the lease area that will be visible. Refer to Zoning Drawings dated July 27, 2016 for a detailed landscaping plan. Attached to the checklist at D.01 is a map with views from several locations surrounding the property demonstrating the minimal visual impact of the proposed facility.

(d) Requirements for all other developments. Development that is not located on a property adjacent to a lot with an existing residential dwelling unit or vacant lot shall comply with the standards in this subsection (c). Buffering shall be accomplished through use of a fence, a planted berm, a landscaped area, an increased setback, or a combination of these techniques.
(1) Fences shall be opaque, non-reflective, and at least six feet, but not more than ten feet high.(2) Landscaped berms shall be at least two feet high and appear natural. Berms shall have a gentle transition to surrounding grade. Berms should not exceed a 3:1 side slope. Berms shall be seeded and planted with tree clusters. Tree clusters shall consist of three or more trees. Evergreens shall be at least six feet in height; deciduous trees shall be a minimum two-inch caliper; and fruit trees shall be a minimum 1.75-inch caliper. Tree plantings shall consist of at least 50 percent evergreens, in order to accomplish year-round buffering.
(3) Landscaped areas shall be of sufficient intensity and width to buffer the use. This will require significant numbers of trees and shrubs, and may be wholly or partly accomplished by the retention of existing vegetation on the site. The use of minimal cosmetic planting strips shall not be deemed sufficient to accomplish buffering.
(4) The use of trees or landscaping shall require assurances that these plantings will survive. This obligates the developer to design the buffer to ensure this, and may include an irrigation requirement to accomplish this. A performance guarantee will be required for one year from the time of installation to guarantee the establishment of the vegetation. The planning staff has the option to waive the performance guarantee if a

permanent irrigation system is in place or installed. Species which are currently known to survive in the county are required. These include species as recognized to be locally appropriate by the Association of Landscape Contractors.

Response: The proposed project complies with this section through the use of increased setbacks, buffering, some additional drought resistant, native plantings and the intervening golf course property between the site and residentially zoned properties.. Applicant agrees to provide a performance guarantee for the proposed plantings, as stated in the zoning drawings dated July 27, 2016. Due to the existing industrial use of the property (concrete plant and existing telecommunications facility), the minimal addition of proposed equipment and the sizable distance from adjacent properties, none of the criteria above would be negatively impacted. While the tower itself may be visible, (as the wireless facility and batch plant are today), it will be painted a compatible color with a non-reflective finish, and the proposed ground equipment would not be visible from any views surrounding the properties. Attached to the checklist at D.01 is a map of photosimulations with views from several locations surrounding the property demonstrating the minimal visual impact of the proposed facility and that additional landscaping and screening are not necessary. Moreover, additional landscaping, beyond what is proposed in the attached landscape plan, is inconsistent with the existing industrial use of the property, which is anticipated to continue into the foreseeable future. The proposed landscaping will consist of five (5) proposed Colorado Spruce (picea pungens) trees. Spruce trees are well known as among the most drought-tolerant species and can survive through prolonged dry periods. No irrigation is proposed and with the nearby Animas River the subsurface water level will be relatively shallow. Per a geotechnical investigation completed by TEP on July 15, 2016 the ground water level was ten (10) feet below grade.

LPLUC 82-174, 102-114 Noxious Weed Management Plan
Response: The site is a sand and gravel quarry with no vegetation. No noxious weeds are present.

LPLUC 82-193--Compatibility Assessment
(c*) Planning commission/joint planning commission/board of county commissioners hearing.*
(1) The planning commission, joint planning commission and board of county commissioners shall be given the report of the neighborhood meeting. The board of county commissioners shall be given the report of the planning commission determination. The planning commission at its hearing, the joint planning commission at its hearing and the board of county commissioners at its hearing shall make a determination on whether or not the development is compatible. In making its determination, the planning commission, joint planning commission and board of county commissioners shall use the criteria outlined in this subsection (c). This determination may be rendered as a finding in the decision on the development application. A recommendation of approval for the project shall constitute a finding of compatibility.

Response: Acknowledged and understood. The proposed development is compatible with the surroundings and will benefit existing and future area residents, businesses and travellers by providing more reliable and comprehensive cell service throughout the coverage area. As more households opt out of landline service and rely solely on their cell phones, a robust and reliable network becomes a necessity for communication, data and E911 calls. Because the proposed facility is designed to hold 4 collocators, this facility will help to minimize the number of cell towers needed to provide service to this area. By locating this facility on an existing industrial parcel, Applicant has aimed for maximum compatibility with the surrounding area.

(2) A compatible development is on which will meet all of the following standards:

a. Traffic generated by the development will not create safety hazards, create traffic, which is beyond the capacity of affected roads, or result in substantial increases over existing traffic volumes, or which results in the reduction of existing service levels;

Response: The proposed facility is unmanned. Current operators at the site, Elam Construction, vehicular traffic demands are detailed below. The proposed facility will add approximately one monthly maintenance visit with a single vehicle, per carrier, so an additional traffic load of between one and four vehicles per month. This demand does not create a safety hazard to traffic load beyond the capacity of any of the roadways in the area, will not significantly increase existing traffic volumes, or result in reduction of existing service levels. The existing easement accommodates emergency access demands. With direct access to CR 252 from the existing asphalt drive there is no need for additional access easements. No neighboring parcel will be obtaining access across the subject parcel. Adequate parking is available immediately adjacent to the proposed compound.

Vehicular truckloads provided by Elam Ready Mix from last year, 2015.

Jan	Feb	Mar	Apr	May	Jun	Jul	Aug	Sep	Oct	Nov	Dec
415	405	500	760	840	1080	1000	930	1020	1050	720	500

See next page for ADT counts.

Traffic Uses and ADT count based off worst case, vehicle count. (June 2015)

Traffic Uses	Description/Notes	No. of Units	ADT Per Unit	Total ADT
Employees	Batch Plant Employees	N/A	N/A	20
Customers	Customers	N/A	N/A	10
Service Vehicles	Concrete Trucks/Trucks/ AT&T maintenance vehicles	N/A	N/A	98
Total				128

*Traffic Uses includes categories such as single-family homes, employees, customers, service vehicles, etc.
** Average Daily Trip (ADT) counts entrances and exits separately. For Example, service delivery drop-off = 2 ADT **(June 2015 – 1080 truck loads. 1080 / 22 (business days) = 49 truck loads per day. Entrance and Exit will double that count to 98 ADT as shown above.**
*** ADT are generally considered over a week-long period when the use is active

Tables 4. <u>Proposed Onsite</u> Traffic Demands

Proposed change would only involve 2-3 construction vehicles per day during the installation of the tower (6 ADT total). Upon completion of construction, maintenance visits every one to two months per carrier would be required.

Traffic Uses	Description/Notes	No. of Units	ADT Per Unit	Total ADT
Employees	Batch Plant Employees	N/A	N/A	20
Customers	Customers	N/A	N/A	10
Service Vehicles	Concrete Trucks/Trucks/ AT&T maintenance vehicles (future carriers)	N/A	N/A	104
Total				134

*Traffic Uses includes categories such as single-family homes, employees, customers, service vehicles, etc.
** Average Daily Trip (ADT) counts entrances and exits separately. For Example, service delivery drop-off = 2 ADT
*** ADT are generally considered over a week-long period when the use is active

A proposed 50’ easement to the Skyway Towers Lease area is included in this proposal even though the only traffic that will be added is 2 ADT per day at most (the facility is unmanned and will only require a monthly maintenance visit per carrier).

The existing and proposed traffic demands would classify the access into the sand and gravel facility as a "Local” road, per LPLUC sec 74-91.b.6.

Type	ADT or Units Served	Design Speed (mph)	R.O.W. (feet)	Surface Width (feet)*	Shoulder Width (feet)*	Maximum Grade (percent)
Major arterial	5,000 plus ADT	55	90	32	4	6
Minor arterial	2,500—4,999 ADT	45	80	30	3	6
Major collector	1,500—2,499 ADT	20-30	80	24	5	8
Minor collector	1,000—1,499 ADT	20-45	75	24	4	8
Local	1—4 units	15-30	40	18		10
Local	5—9 units	15-30	50	22	3	10
Local	10 plus units	20-45	60	24	3	8

Currently the access drive into the sand and gravel facility is asphalt that varies from 22' to 30' wide as shown in the zoning drawings dated, July 27, 2016, and shown on the next page. With graveled shoulders varying from 3' and above depending on the area within the sand and gravel facility. All this meets or exceeds LPLUC requirements.

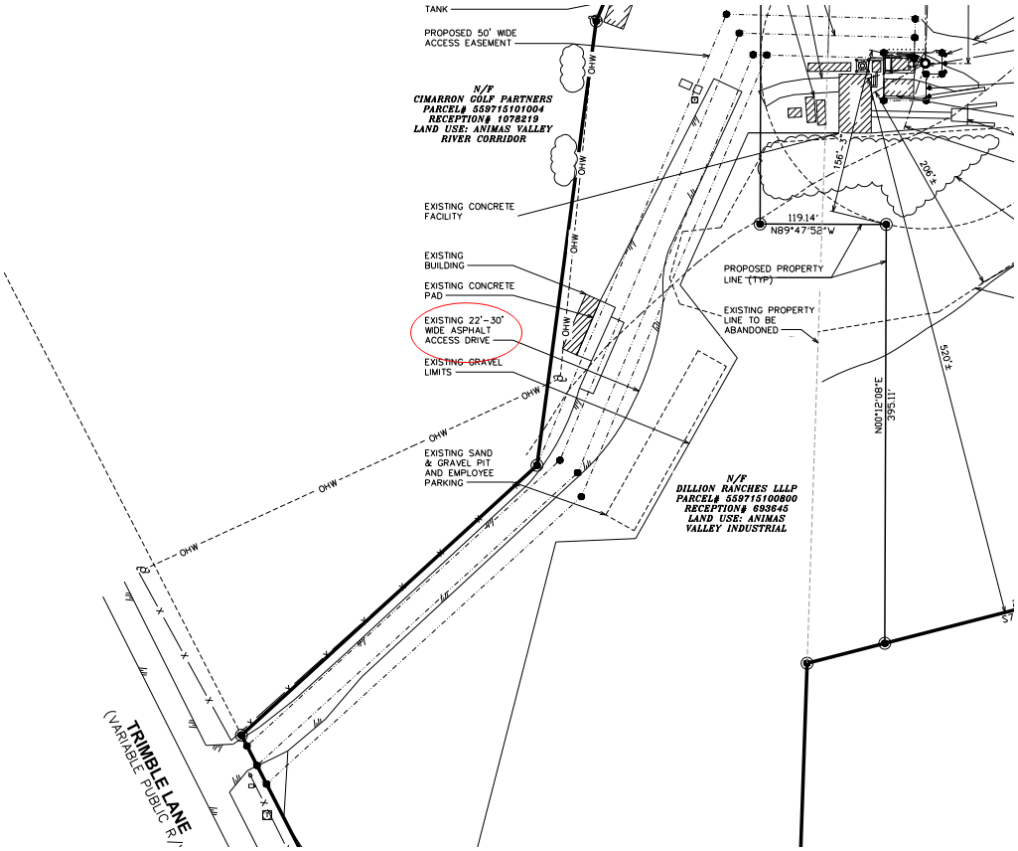

Site Plan with Location of Access Drive

Photo of Access Drive

Fire Department Access Requirements - Response from the Durango Fire Protection District is copied below. Below are Dead-End Fire Apparatus Access Road requirements. Graveled areas in front of the Skyway Towers Lease area meets or exceeds several of these requirements including the 96' Diameter Cul-De-Sac, the 60' "Y", 120' Hammerhead and Alternative 120' Hammerhead Turnarounds.

From: Hanks, Karola [mailto:HanksKJ@durangofirerescue.org]
Sent: Monday, August 08, 2016 2:52 PM
To: Nicholas M. Constantine
Subject: Proposed Cell Tower at Hermosa Area - 691 Trimble

Mr. Constantine,
Your email of July 14, 2016 to Chief Doughty was forwarded to my office (Fire Marshal Office) as we are the fire code enforcement side of the organization.

You are correct in that the proposed tower is in an already fire apparatus accessible area.

The only comment would be to double check that the site currently has the 691 C.R. 252 address in place. It is not Trimble lane.

If you need anything else, please feel free to contact me.

Karola
Fire Marshal Karola J. Hanks
Durango Fire Protection District
104 Sheppard Drive
Durango, Colorado 81301
(970)382-6023
hankskj@durangofirerescue.org

TABLE D103.4
REQUIREMENTS FOR DEAD-END FIRE APPARATUS ACCESS ROADS

LENGTH (feet)	WIDTH (feet)	TURNAROUNDS REQUIRED
0–150	20	None required
151–500	20	120-foot Hammerhead, 60-foot "Y" or 96-foot-diameter cul-de-sac in accordance with Figure D103.1
501–750	26	120-foot Hammerhead, 60-foot "Y" or 96-foot-diameter cul-de-sac in accordance with Figure D103.1
Over 750	Special approval required	

Table 1: Requirements for Dead-end Fire Apparatus Access Roads, IFC 2006

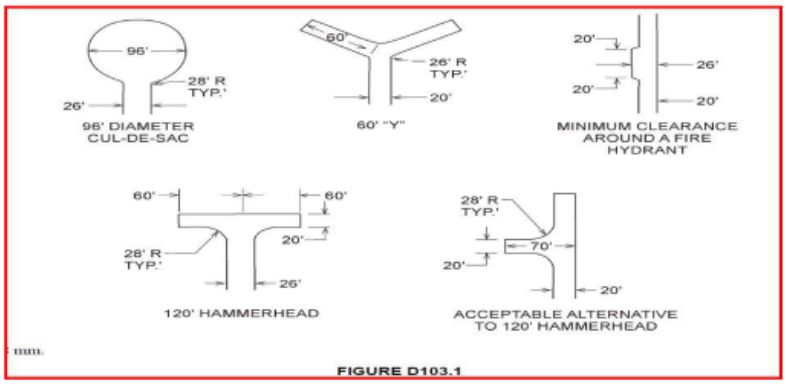

Figure 2: Dead End Fire Apparatus Access Road Turnaround, IFC 2006

b. Any one of the following will not disturb neighbors: noise, odor, smoke, dust, vibration, glare, radiation or late hours of operation;
Response: The facility will comply with all county noise standards, and will not produce odor, smoke, dust, vibration, glare or late night hours. The FCC has preempted local regulation for electromagnetic radiofrequency emissions. and has established standards for those emissions. The facility will comply with the FCC limits for electromagnetic radiofrequency emissions.

The following Dust Mitigation has been supplied by Elam Construction/Sandco and will remain in affect throughout the construction of the proposed tower and in the future.

Elam Construction, Inc. dba Sandco Inc. Permit No. 99LP0841F - January 26, 2015
AIRS ID: 067/0288/001
PARTICULATE EMISSIONS CONTROL PLAN FOR MINING AND PROCESSING ACTIVITIES
THE FOLLOWING PARTICULATE EMISSIONS CONTROL MEASURES SHALL BE USED FOR COMPLIANCE PURPOSES ON THE ACTIVITIES COVERED BY THIS PERMIT, AS REQUIRED BY THE AIR QUALITY CONTROL COMMISSION REGULATION NO.1, SECTION III.D.1.b. THIS SOURCE IS SUBJECT TO THE FOLLOWING EMISSION GUIDELINES:

a. **Mining and Processing Activities -** Visible emissions not to exceed 20%, no off-property transport of visible emissions.
b. **Haul Roads -** No off-property transport of visible emissions shall apply to on-site haul roads, the nuisance guidelines shall apply to off-site haul roads.
c. **Haul Trucks -** There shall be no off-property transport of visible emissions from haul trucks when operating on the property of the owner or operator. There shall be no off-vehicle transport of visible emissions from the material in the haul trucks when operating off the property of the owner or operator.
Control Measures
1. Adequate soil moisture must be maintained in topsoil and overburden to control emissions during removal. Watering shall be implemented if necessary.
2. Topsoil and overburden stockpiles shall be compacted and revegetated within one year.
3. Emissions from material handling (i.e. removal, loading, and hauling) shall be controlled by watering at all times unless natural moisture is sufficient to control emissions.
4. Haul roads shall be graveled and watered as often as needed to control fugitive particulate emissions such that the above guidelines are met.
5. Reclamation works and sequential extraction of material shall be initiated to keep the total disturbed areas at any one time to a minimum.
6. All disturbed areas shall be watered as often as needed to control fugitive particulate emissions such that the above guidelines are met.

c. The development will not create adverse or unsightly views for neighbors and/or the traveling public;
Response: The monopole will be painted to match the surroundings with a nonreflective finish. The site location was chosen because there is an ongoing industrial use on the property, which predates the construction of the nearest residential structures. As the photosimulations attached to the Checklist at Other/Miscellaneous demonstrate, the facility will not be not visible from the nearest residential properties. Neighboring properties, namely a quarry and a golf course, create a natural buffer for the facility. Balloon test photographs included at the end of this narrative package demonstrate that the facility will not be visible from the Radar House or the railroad, and would have minimal visual impact from surrounding areas.

d. The development will not cause pollution of ground or surface waters;
Response: No water or pollution is used or proposed to operate the facility and no pollution will be generated by this unmanned facility.

e. The development will not adversely change the character of the neighborhood;
Response: The neighborhood has grown up around a concrete batch plant and quarry. There is every indication that those intense uses will continue, making this site the best place to locate the monopole. It will not change the existing character of the neighborhood. As the neighborhood develops, the golf course will continue to provide a buffer, as will the trees in the surrounding areas. Attached to the checklist at D.01 is a map of photosimulations with views from several locations surrounding the property demonstrating the minimal visual impact of the proposed facility. The site is zoned Industrial, which is part of the existing character of the neighborhood.

f. The development will not significantly disturb the privacy of neighbors.
Response: The facility will be unmanned and will require only once a month visits for routine maintenance during normal business hours.

4. COMMUNITY INPUT

A community meeting was held on July 11, 2016. Approximately 10 people attended. Additionally, there have been 8 comment letters received. A map of the addresses of those who commented by letter is below (from addresses that were listed on comments). The public comments raised the following issues:

- Need for 124 feet in height;

Response: Please see revised RF Propagation Map package, applicant response to RG & Associates review and revised narrative.

- Visibility of tower;

Response: Applicant has agreed to paint the facility a non-reflective, compatible color, has agreed to add landscaping and has selected a location on a very large site that is set back from nearby homes. See attached balloon test photos.

- Decrease in property values;

Response: At least one of the commenters acknowledged very poor AT&T coverage in this area. As more residents forego landline coverage and transition to cell phone only plans, the need for reliable cell phone coverage becomes more essential for calls, data and emergency access. This tower will be obscured from view in most of the residential areas by terrain, vegetation and distance. There is no evidence that property values will decrease in the vicinity of the tower.

- Alternative locations;

Response: See section 5 below and Revised RF Propagation maps dated 8/8/2016.

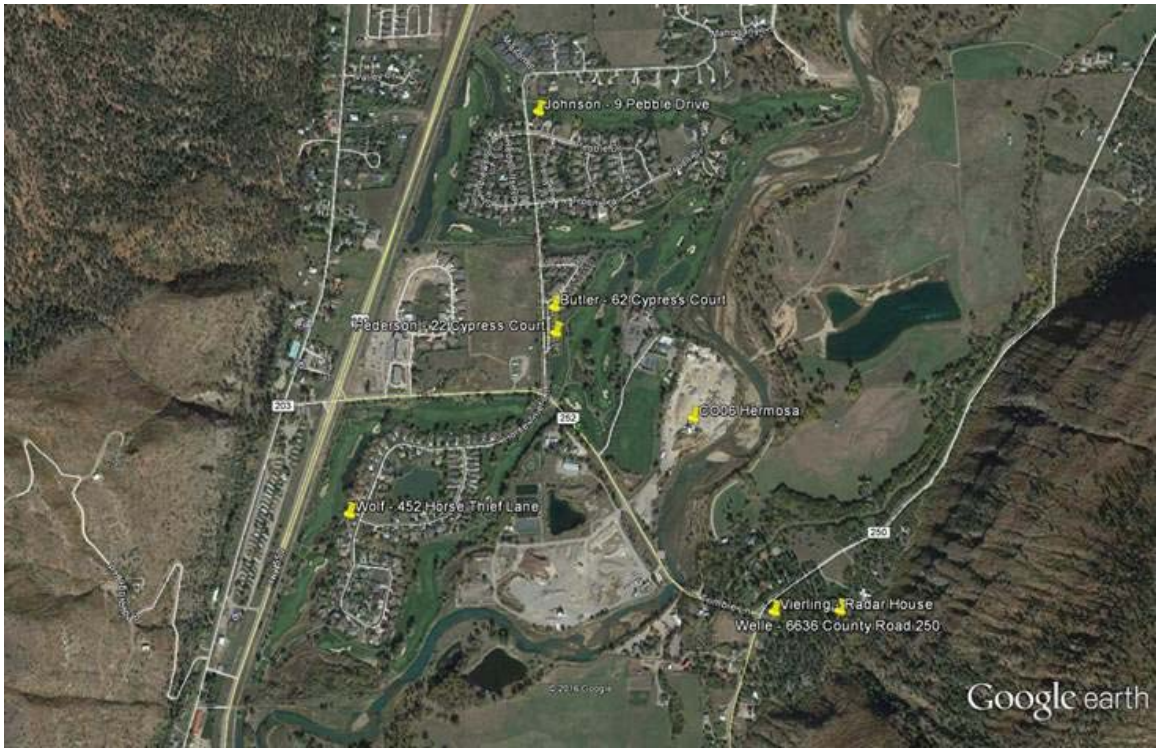

5. ALTERNATIVE SITE LOCATIONS

The following is an analysis of other potential properties that are zoned Neighborhood Commercial, General Commercial, and Industrial.

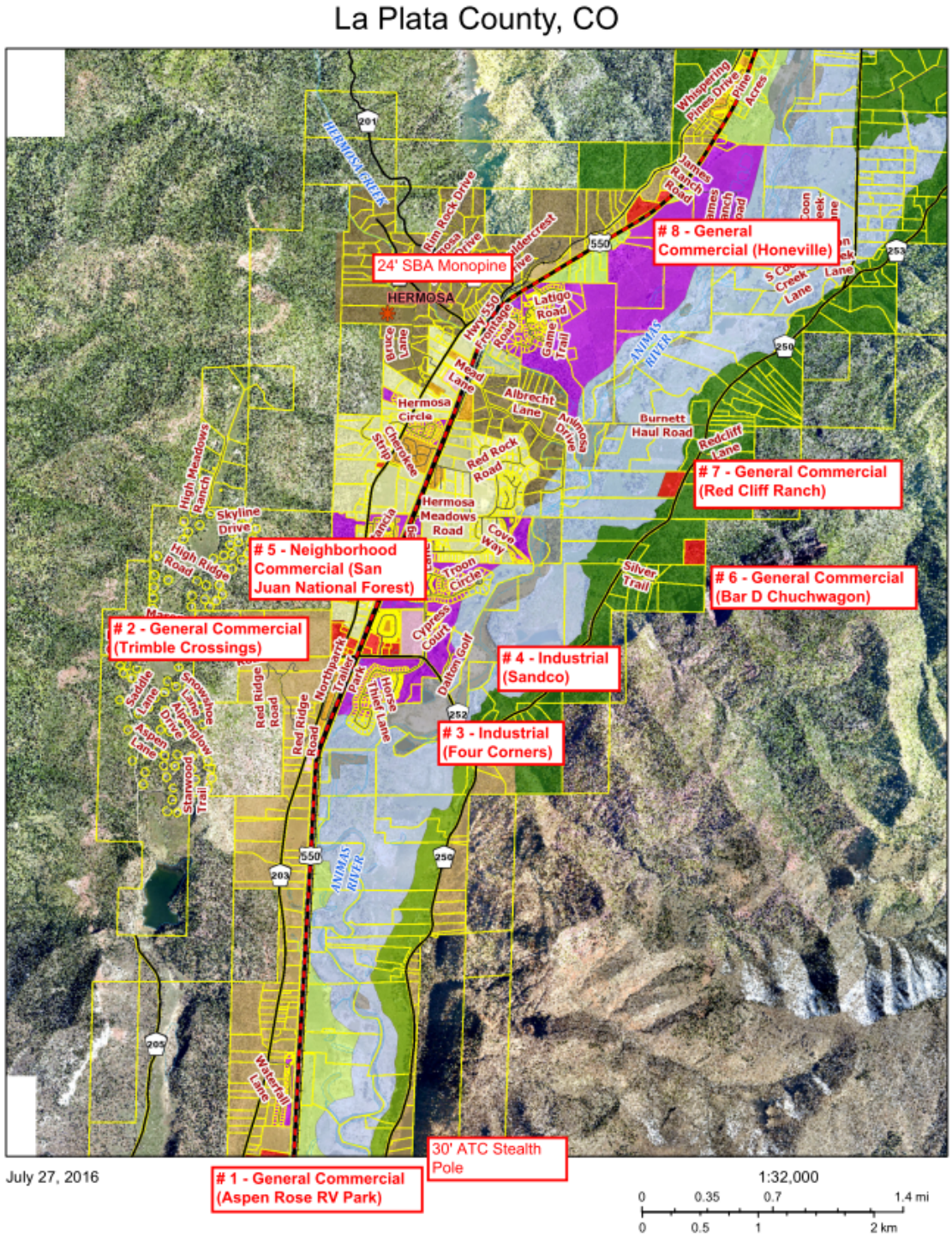

#1 – Alpen Rose RV Park –Right against US-550 and Railroad. 2.8 miles to south of Proposed site. Will not meet RF objectives. See RF propagation maps for analysis of this location.

#2 – Trimble Crossings – This is all developed with new grocery store, a spa and other retail. There is no space for tower with setbacks.

#3 – Four Corners – This was one of original candidates when AT&T first installed equipment on concrete silo. Similar/same view shed issues as current proposed site but this location is closer to residences

#4 – Current site – Shown for reference.

#5 – Zoned commercial – Owner by San Juan National Forest. Surrounded by housing and development on all sides. Closer to residences.

#6 – Bar D Chuckwagon – Event Center at base of mountain range along eastern side of Animas Valley. Portion of property zoned Commercial is already developed with a parking lot and venue while the remaining portion of the property is zoned 10 Acre Single Family. RF propagation maps would be similar to #7 location but even worse with the ridgeline to the south shadowing the RF signal even further

#7 – Red Cliff Ranch –Located on east side of Animas River. Will not meet RF objectives. See RF propagation maps for analysis of this location.

#8 – Honeyville – Property is mostly developed and the tower would not meet setbacks and would have topographic constraints if placed on the northern/western side of property. Will not meet RF objectives. See RF propagation maps for analysis of this location.

5. CONCLUSION

As this revised narrative demonstrates, AT&T has a long history of seeking to address an acknowledged lack of coverage in the vicinity of the proposed site. Several years ago, AT&T's request to update the equipment on the Lone Pine Trailer Park tower was denied, and moved to the Sandco site at the county's request. It is a location that makes sense because it has industrial zoning and uses. The proposed tower location is set back from residential uses by significant distance, with vegetation and topography that minimizes the visual impacts on the nearest neighbors.

Skyway Towers and AT&T are trying to meet the coverage objectives of filling a demonstrated gap in existing coverage, and adding LTE to address a 150,000% increase in demand for service since 2007, and remove the nonconforming Lone Pine Trailer Park site. The height requested is justified because of the county's requirements for 3 usable collocation spaces, the topography challenges, and the height needed to reach the area served by the Lone Pine Trailer Park site so it can finally be removed from service.

The proposed telecommunications facility meets all applicable County criteria, is the minimum size needed to meet the coverage objectives and to support the required number of collocations, and is compatible with the surrounding area. The facility, as designed, will allow the removal of AT&T's antennas from the Lone Pine Trailer Park site and will host 3 additional carriers, eliminating the need for 3 additional towers in the future. Applicant therefore respectfully requests that La Plata County approve the request for a special use permit.